Ride On Locomotive

Installation Guide

Phoenix Sound Systems, Inc.
3514 West Liberty Road
Ann Arbor MI 48103
www.phoenixsound.com

phone: 800-651-2444
fax: 734-662-0809
e-mail: phoenixsound@phoenixsound.com

©2005-2019 Phoenix Sound Systems, Inc.

Table of Contents

Diagram Legend....3
PB17....4
Basic Installation....4
Regenerative (Dynamic) Braking Systems....5
Manual Speed Control....6
Volume Potentiometer....7
PB11v6....8
Basic Installation....8
Volume Potentiometer....9
Manual Speed Control....10
B+ (Motor brush tied to battery +) Installation....11
PB11....13
Basic Installation....13
Volume Potentiometer Option....14
Manual Speed Control Installation....15
B+ (Motor brush tied to battery +) Installation....16
PB9....17
Basic Installation....17
Volume Potentiometer Option....18
Manual Speed Control Installation....19
B+ (Motor brush tied to battery +) Installation....20
2K2....21
Basic Installation....21
Volume Potentiometer Option....22
Manual Installation....23
B+ Installation....24
4QD Installation....25
Connecting Horn and Bell Triggers to HRB-324....25
Speed Pickup from the Potentiometer, not the motor....26
Hand-held Wiring....26

Diagram Legend

Capacitor

Diode

Diode, TVS
SA24A Series

Ground

Potentiometer

Resistor

Computer Access Jack

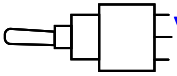
Volume Switch

Pushbutton Switch

Toggle Switch

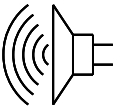
Loudspeaker

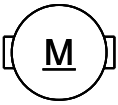

Motor

PB17

Basic Installation

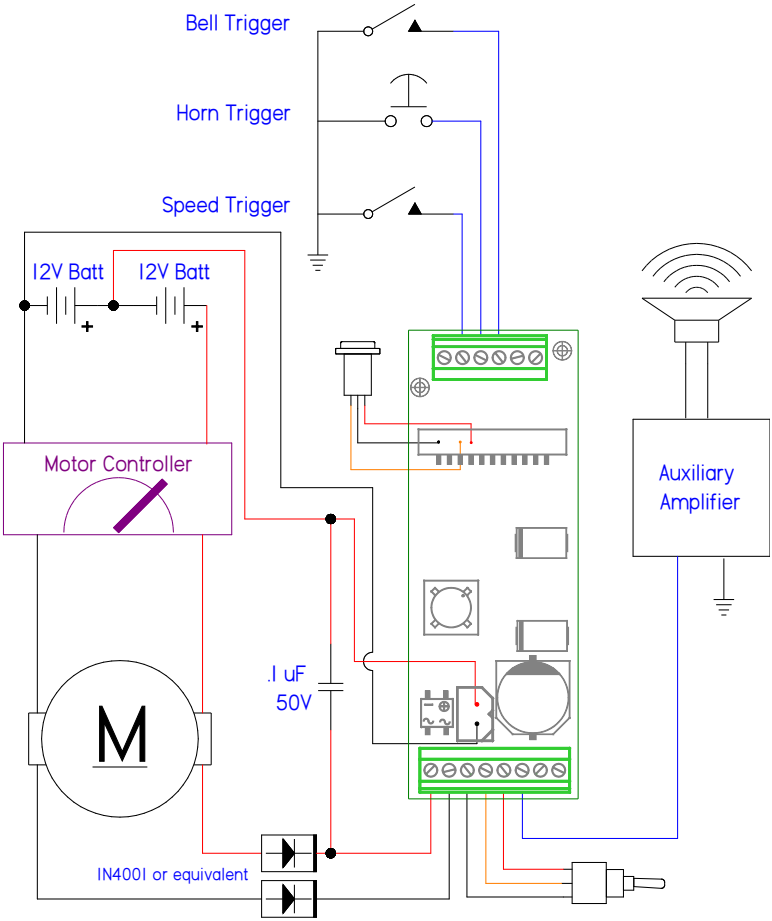

Note 1: "OPTIONAL"
0.1 uF cap will start the board when battery is turned on.

Note 2: If not hooking to an electric motor move the battery wires to Terminals 1 & 2, omit diodes and cap.

Regenerative (Dynamic) Braking Systems

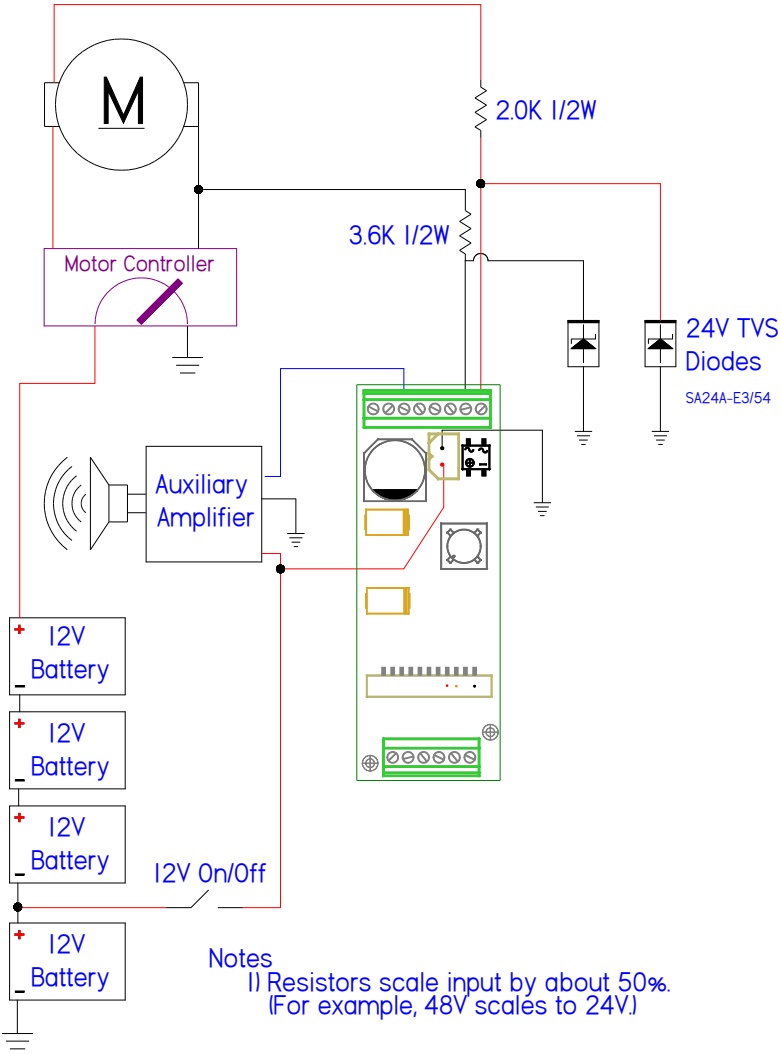

Manual Speed Control

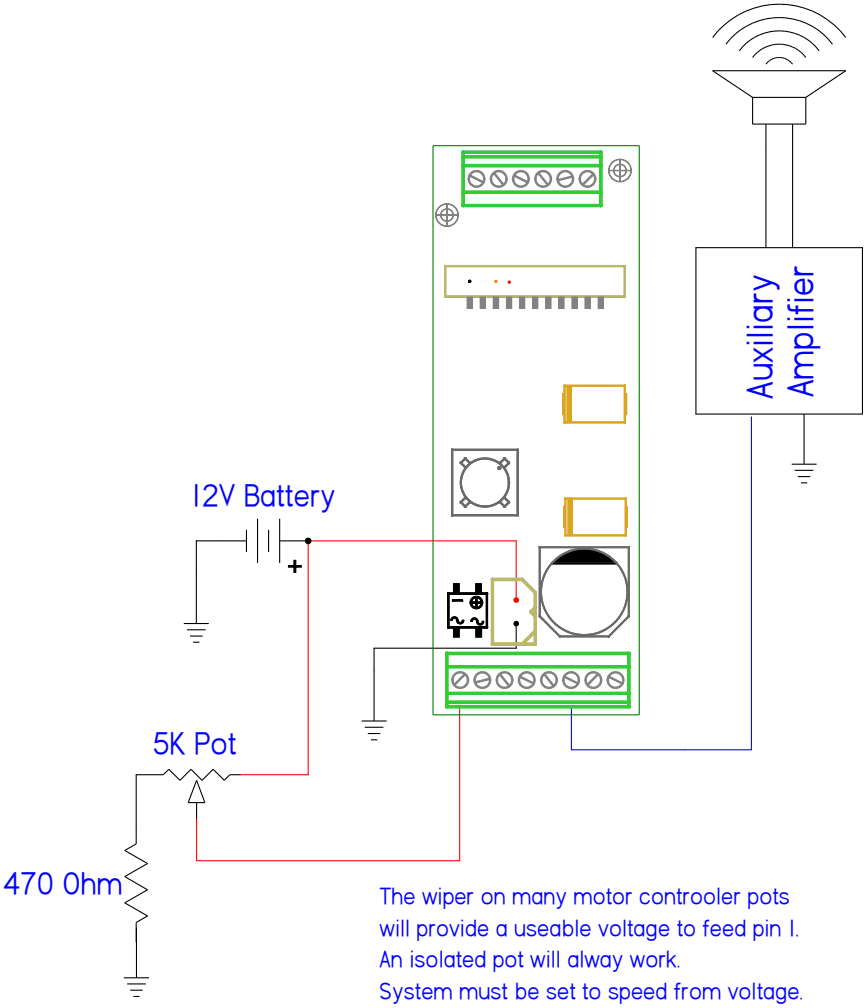

Volume Potentiometer

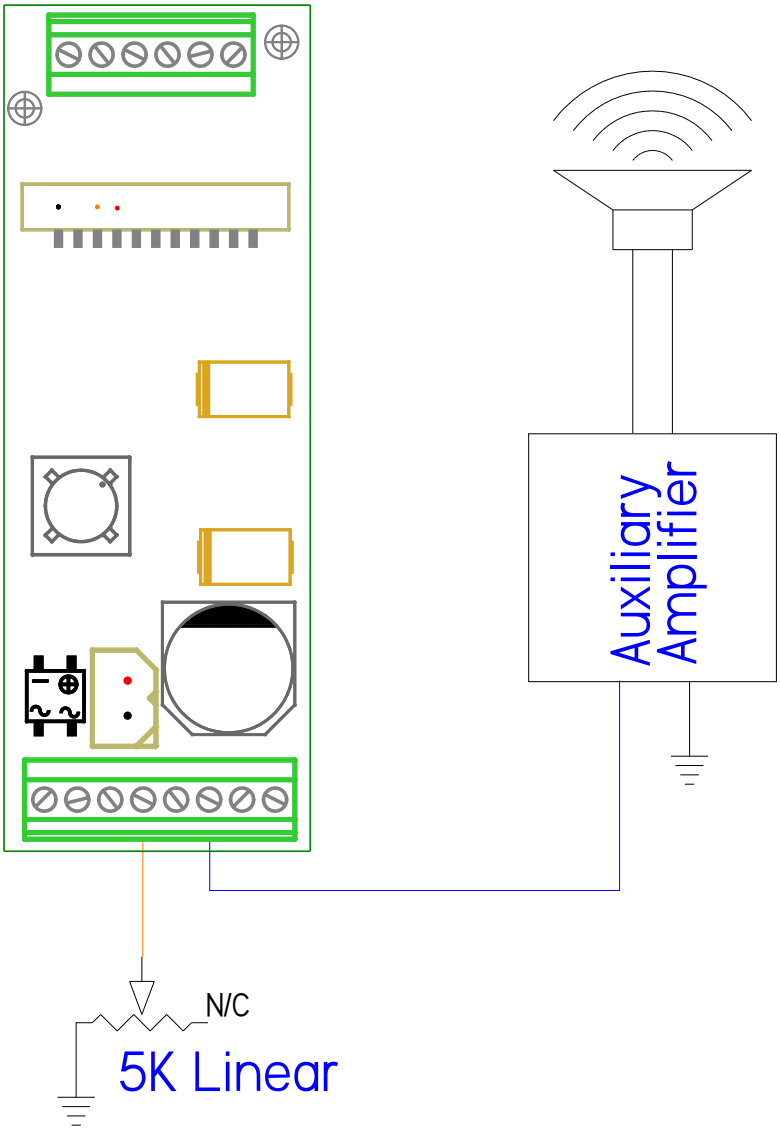

PB11v6

Basic Installation

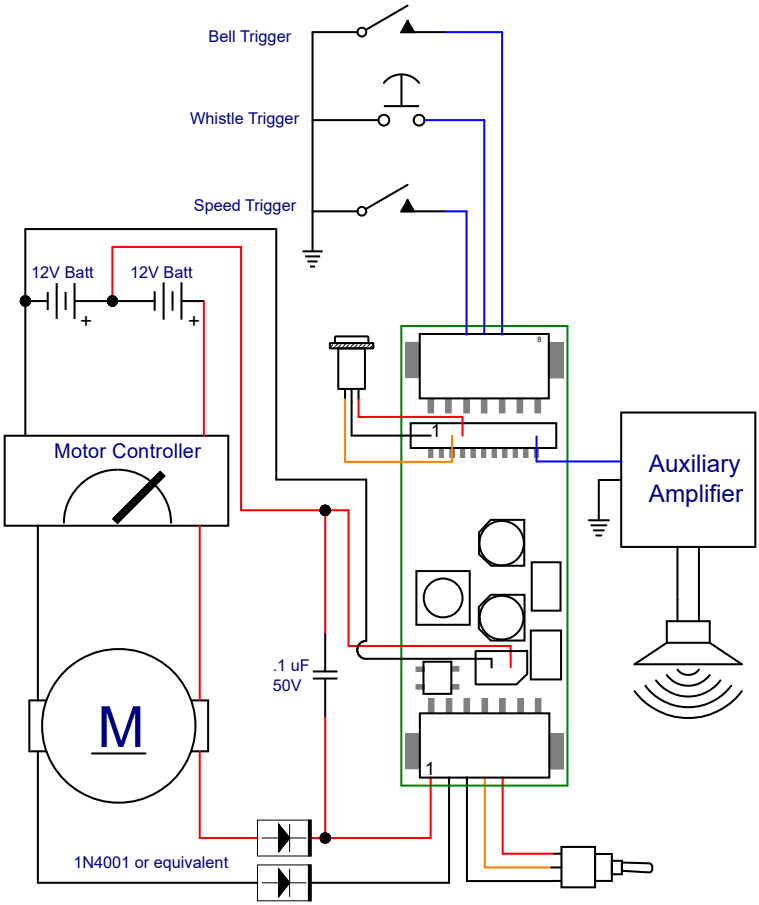

Note 1: *OPTIONAL*
0.1uF cap will start the board when battery is turned on.

Note 2: If not hooking to an electric motor move the battery wires to Terminals 1 & 2, omit diodes and cap.

Volume Potentiometer

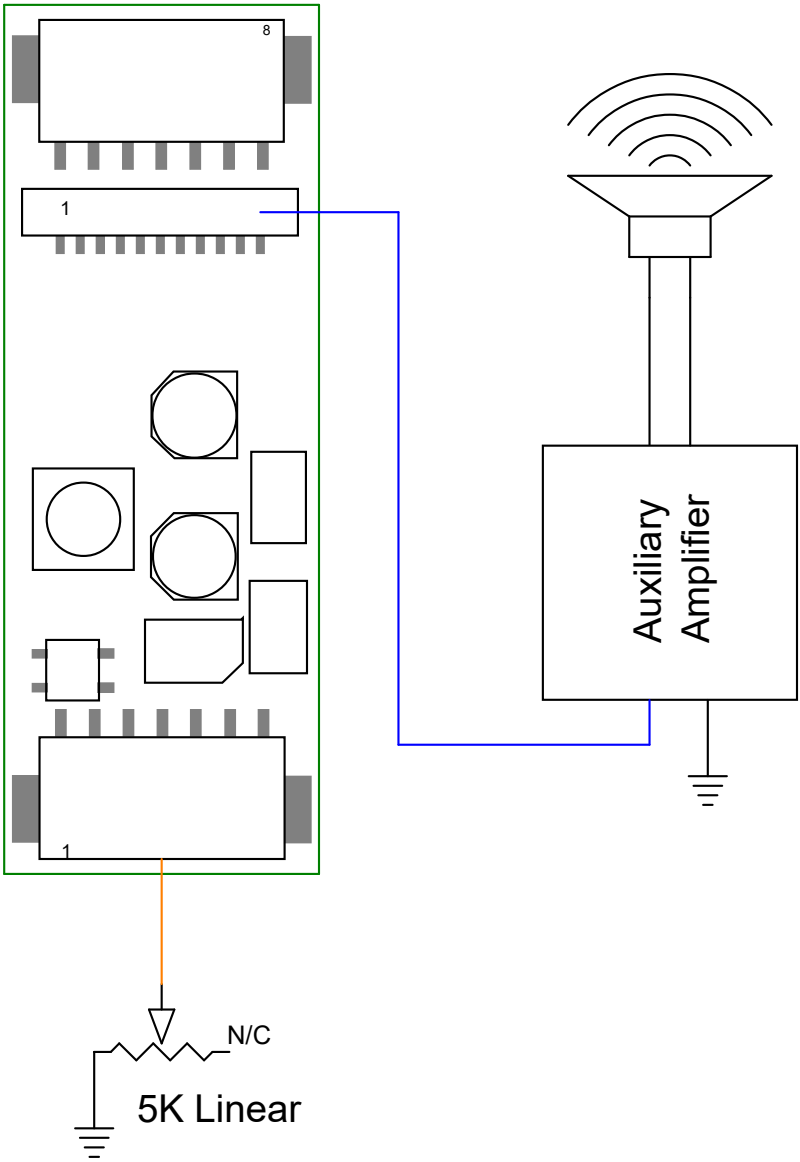

Manual Speed Control

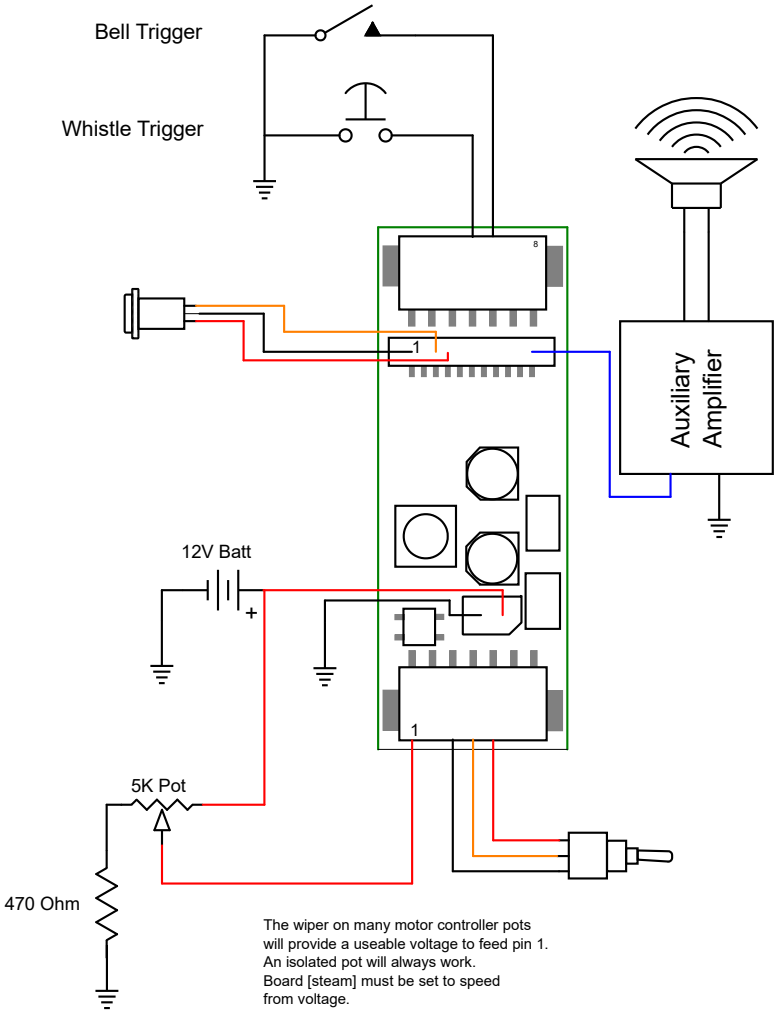

B+ (Motor brush tied to battery +) Installation

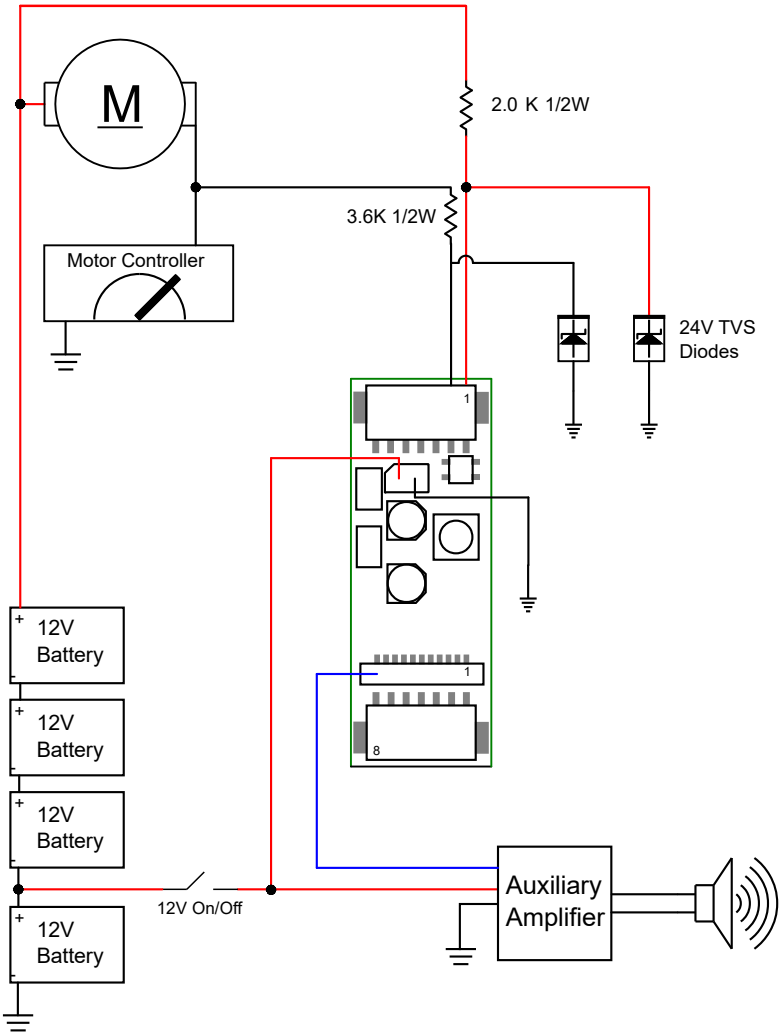

Notes

1) Resistors scale for 48V motors and 24V with dynamic braking.

2) Resistors are not needed for 24V or less .

PB11

Basic Installation

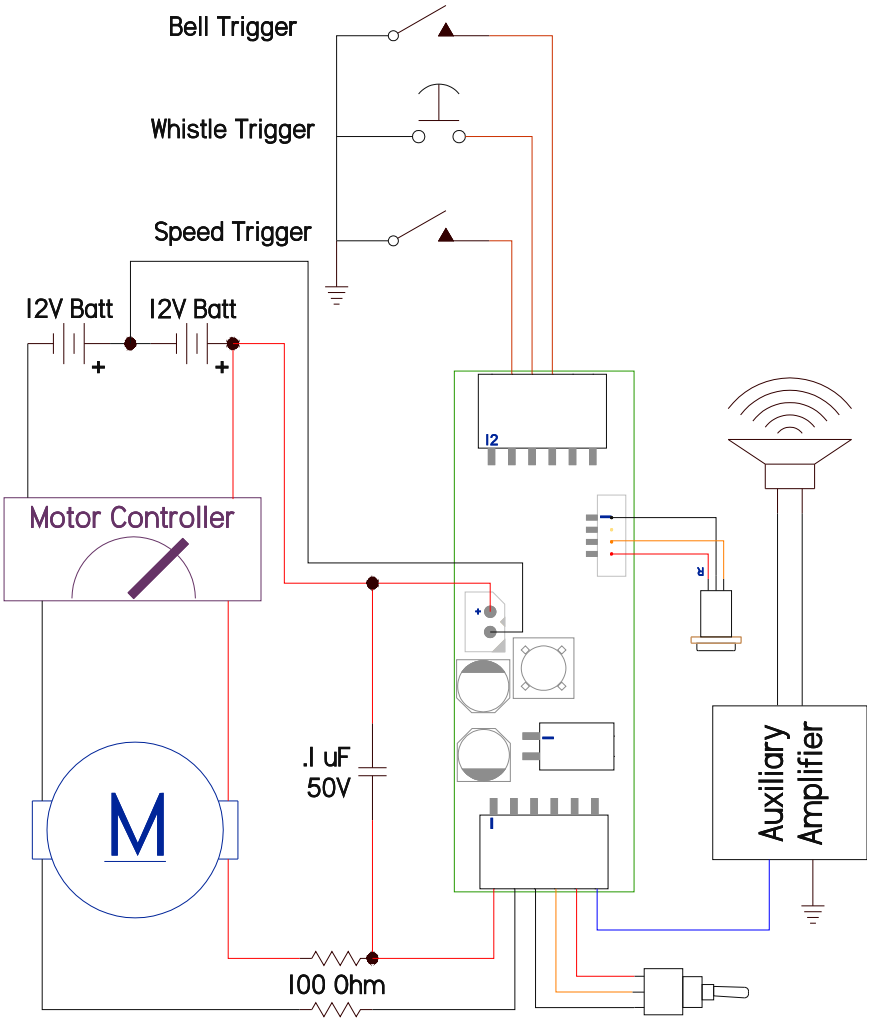

Note 1: 0.1uF cap will start the board when battery is turned on.

Note 2: If not hooking to an electric motor move the battery wires to Terminals 1 & 2

Volume Potentiometer Option

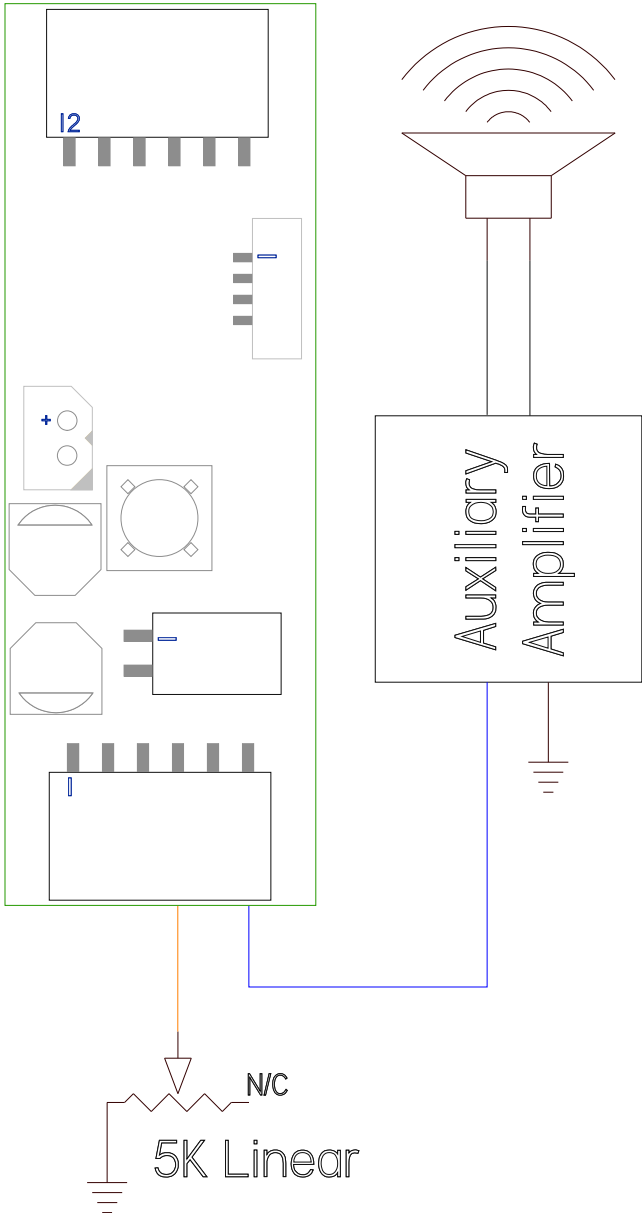

Manual Speed Control Installation

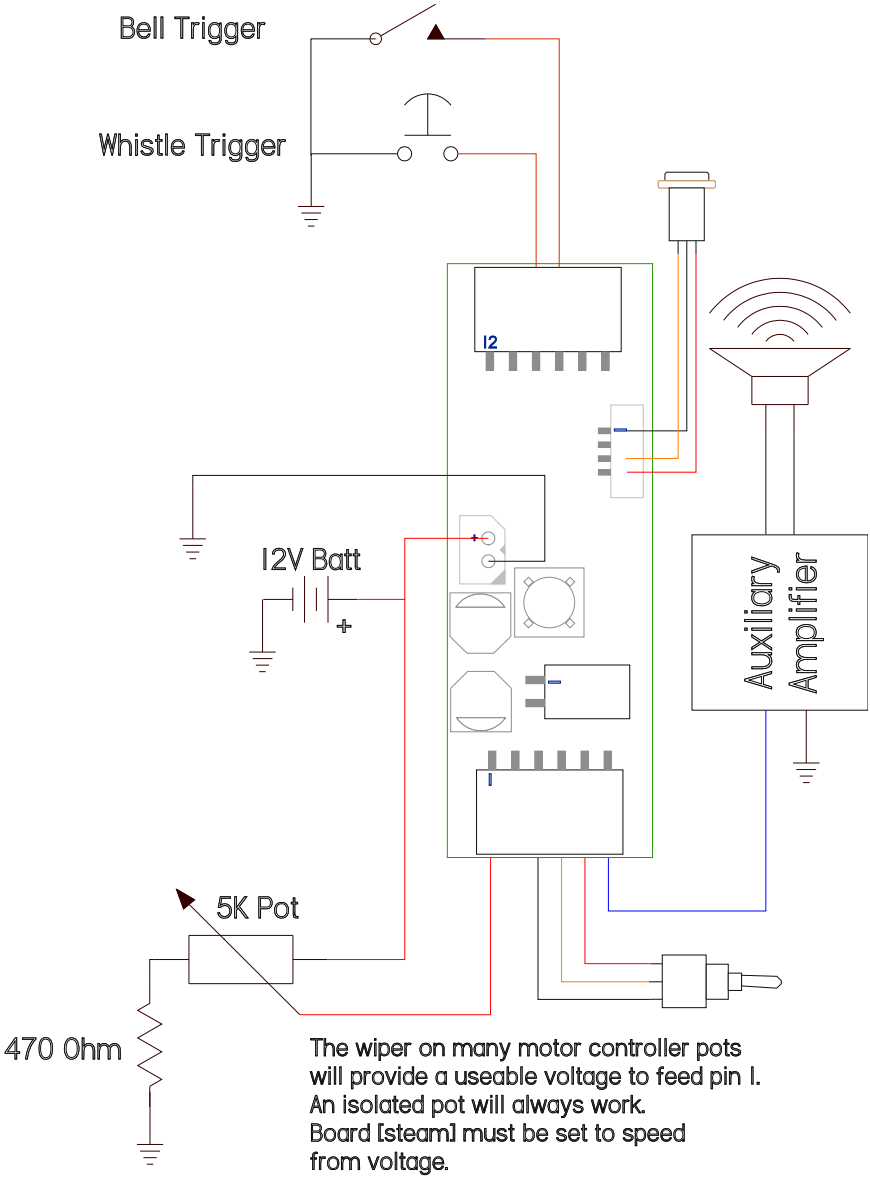

B+ (Motor brush tied to battery +) Installation

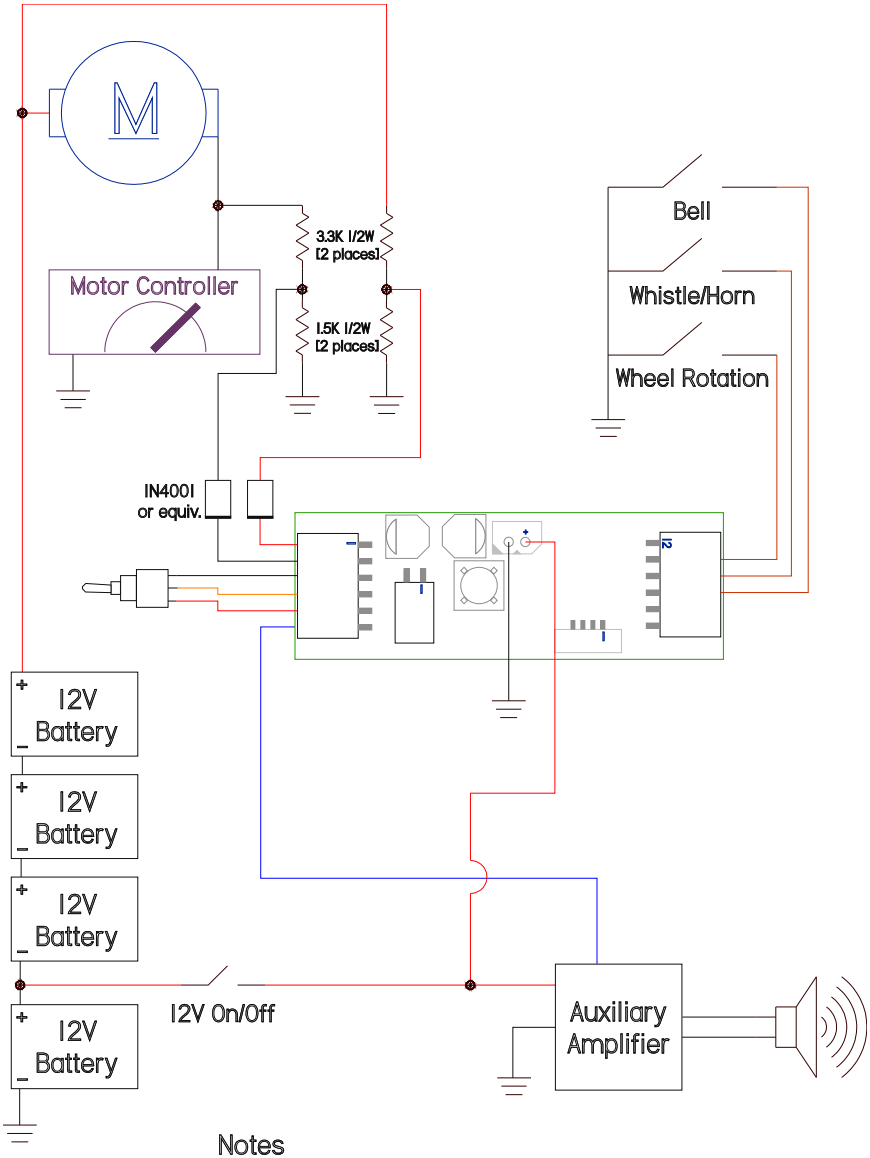

Notes

○: Resistors scale for 48V motors and 24V with dynamic braking.

○: Resistors are not needed for 24V or less.

PB9

Basic Installation

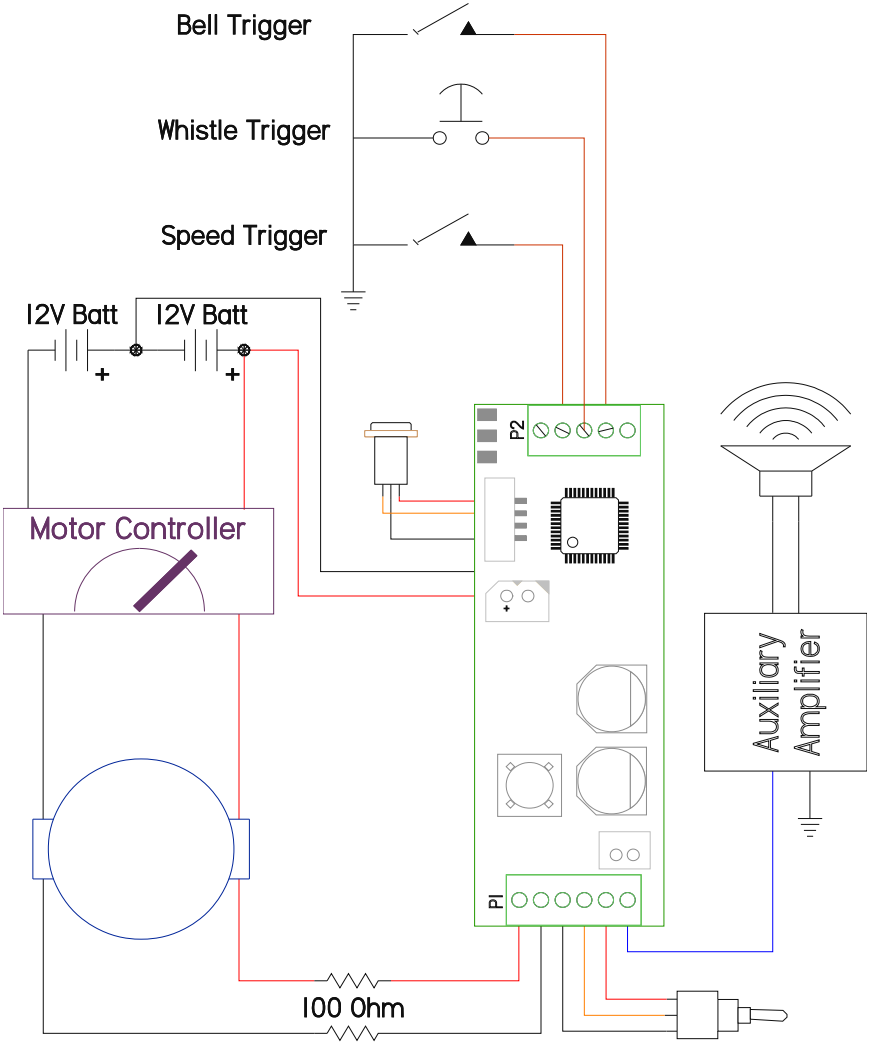

Note: If not hooking to an electric motor move the battery wires to Terminals 1 & 2

Volume Potentiometer Option

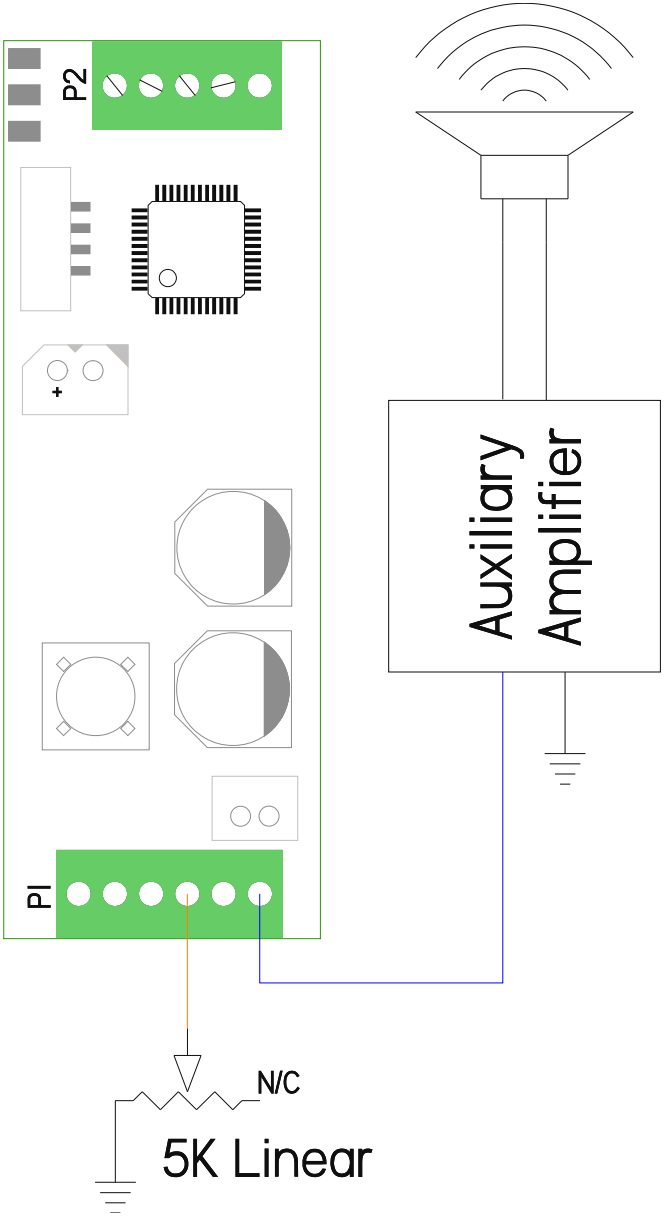

Manual Speed Control Installation

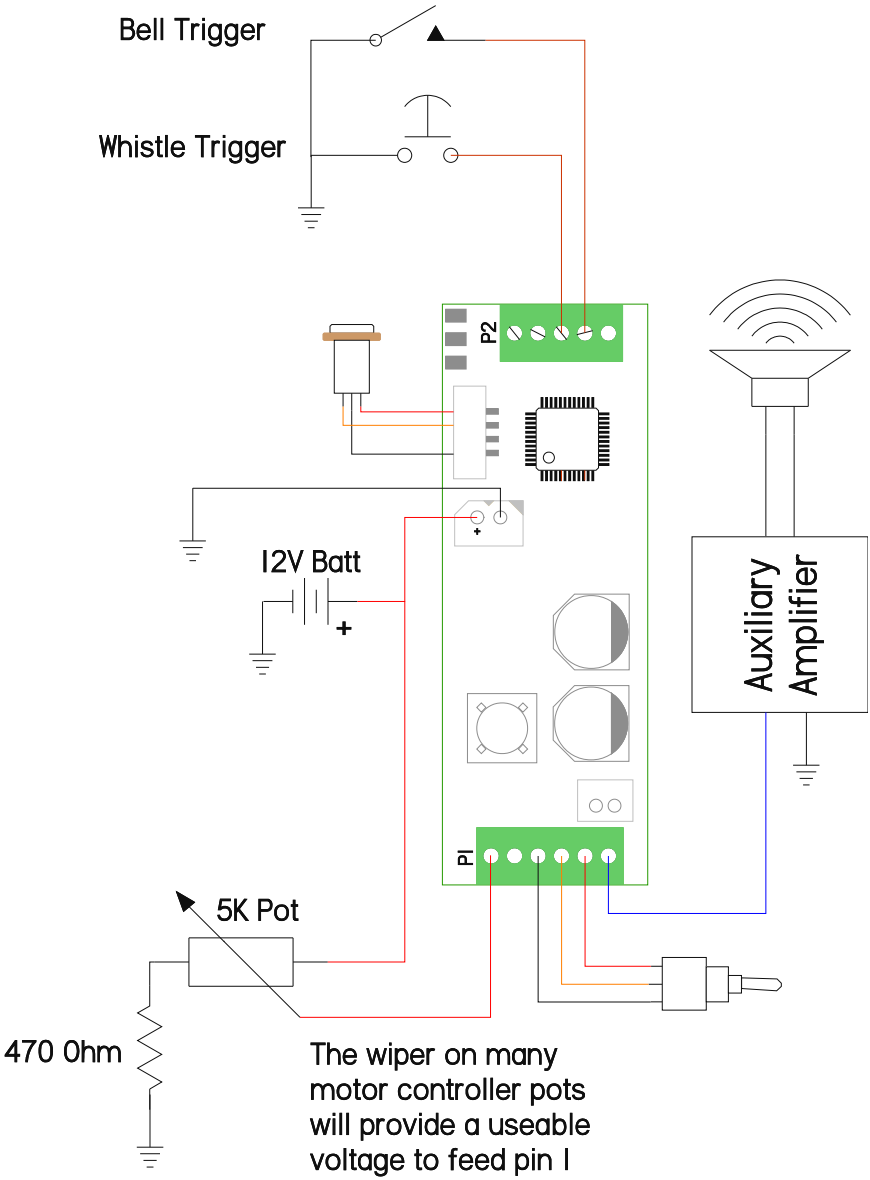

B+ (Motor brush tied to battery +) Installation

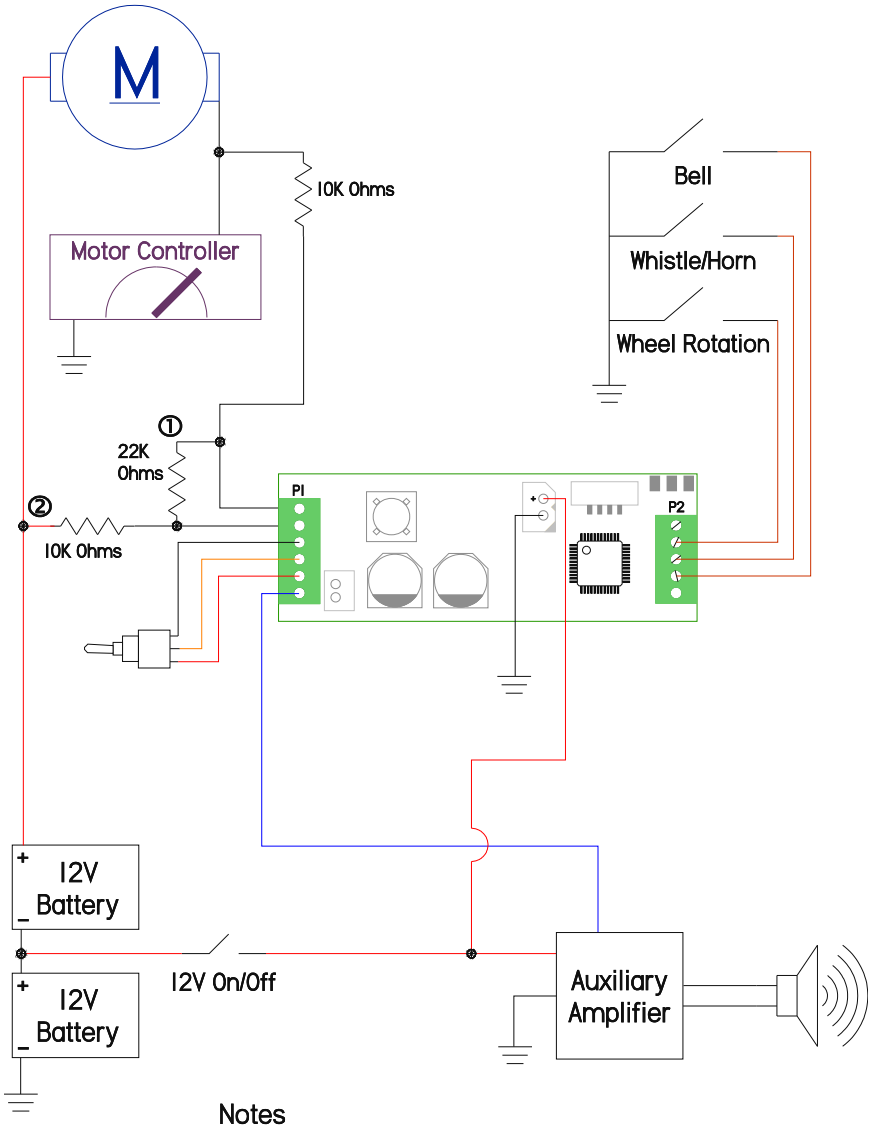

Notes

①: For 48V motors use 10K not 22K (30% Scaling)

②: If the sound system speed is high when the motor is off, move this wire from B+ to ground

2K2

Basic Installation

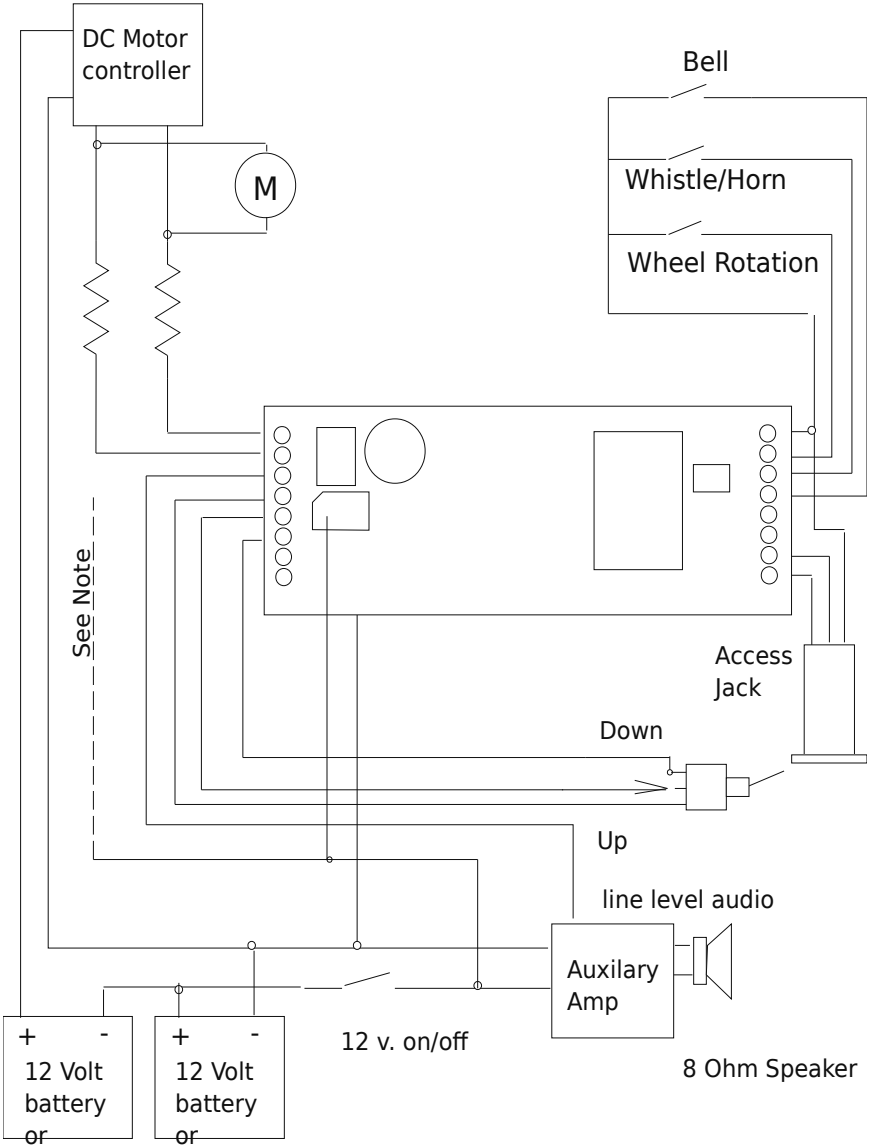

Volume Potentiometer Option

The volume out of the auxiliary Audio Line Level Output (terminal 3) responds to the standard center of the SPDT volume switch, connected to terminals 4, 5 & 6.

Alternately, you can wire in a volume control pot if you prefer. A 5K Audio Taper pot will be fine. The 10K and 1K resistors can be of the common ½ watt type.

You will want to run the volume of the sound board all the way up. Do this by powering the board and connecting terminals 4 & 5 together. Disconnect this bridge once maximum volume is reached. If you leave these terminals strapped together the sound board will enter a manual adjustment mode whenever the system is powered up.

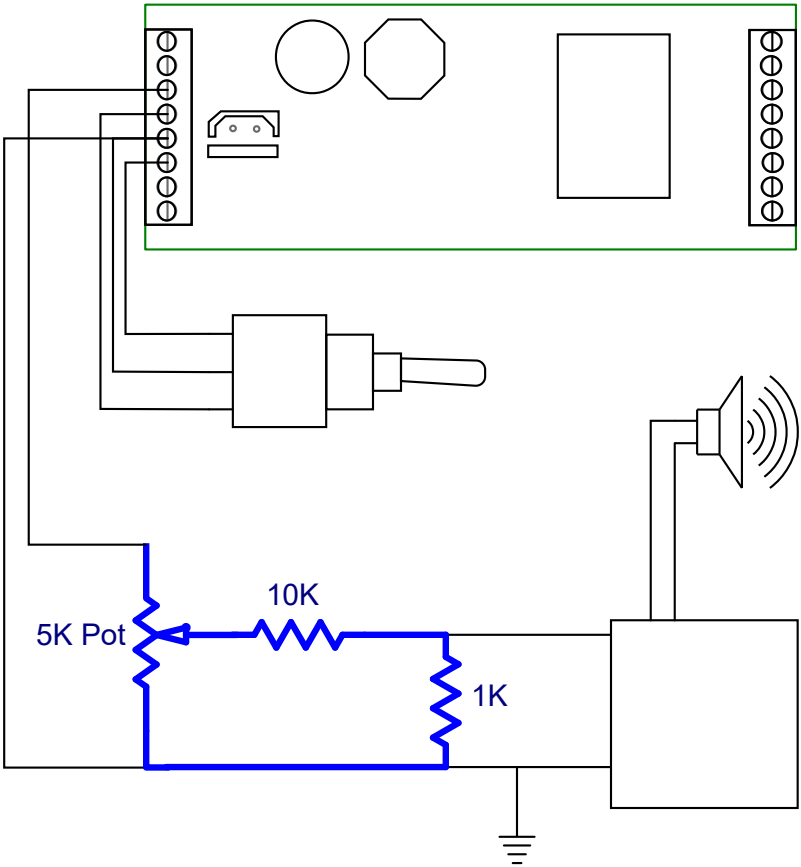

Manual Installation

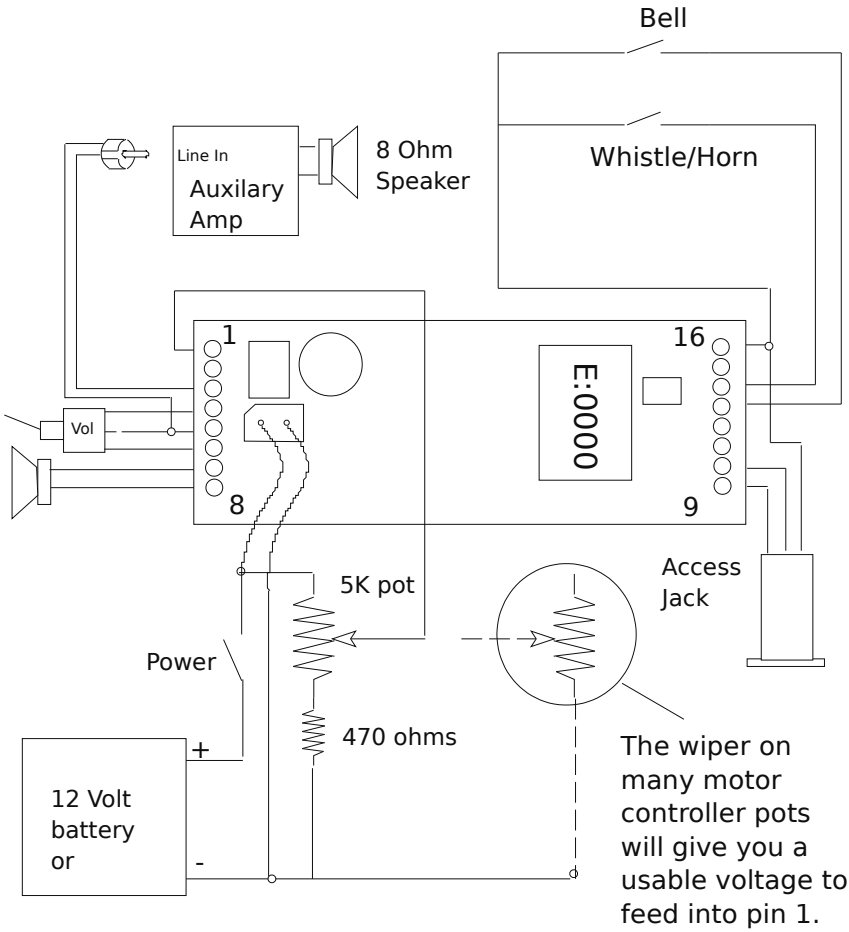

NOTE: THIS SYSTEM IS CONFIGURED TO DETERMINE SPEED FROM VOLTAGE RATHER THAN BY TRIGGERS.

B+ Installation

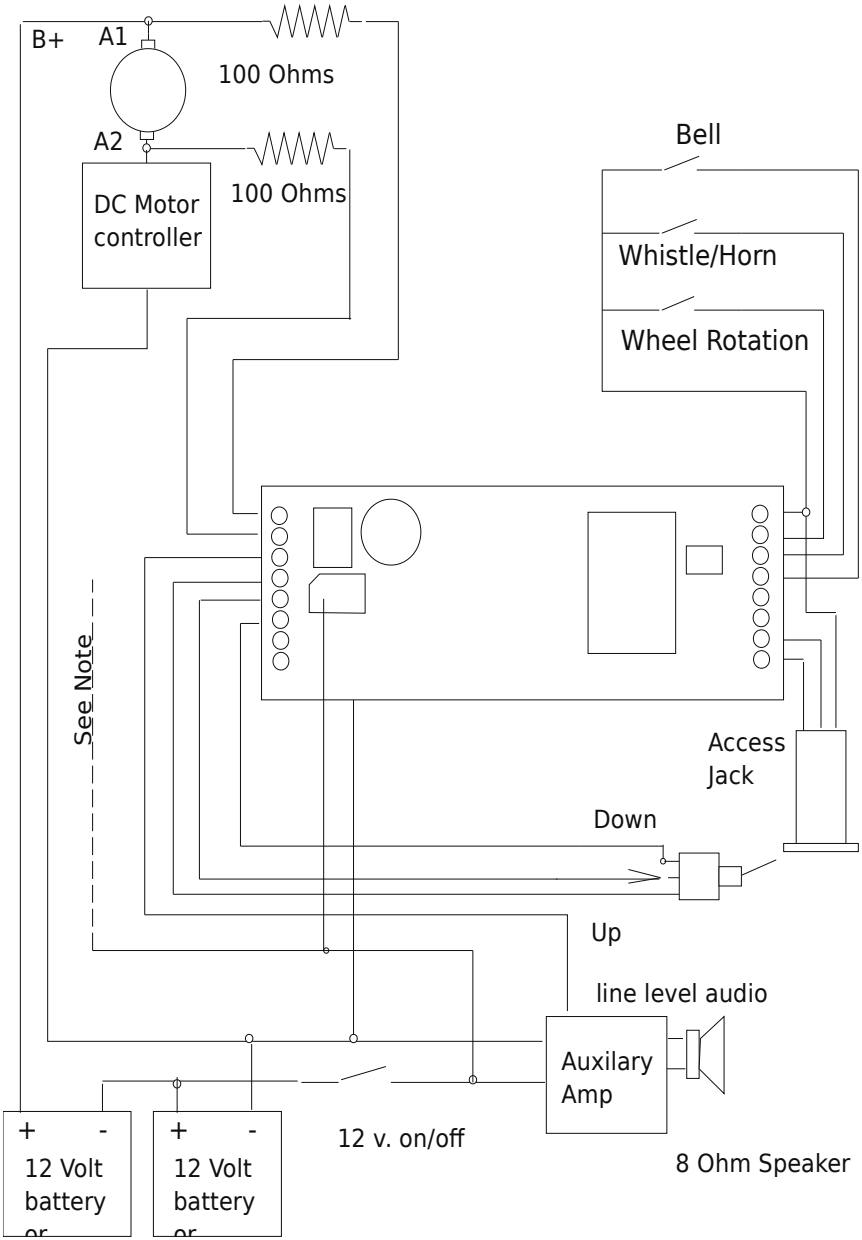

4QD Installation

Connecting Horn and Bell Triggers to HRB-324

Relay 1 will be the whistle/Horn (2K2 terminal 14, PB9 Terminal 9)

Relay 2 will be the bell (2K2 terminal 13, PB9 Terminal 8)

If the sound board is programmed for manual signaling, the bell will latch on with a quick switch closure and the horn will stay on as long as relay 1 is held on. Make sure to connect to the Normally Open (NO) side of the Relay and the tie the Commons (CO) together into terminal 16 on the 2K2, terminal 11 on the PB9.

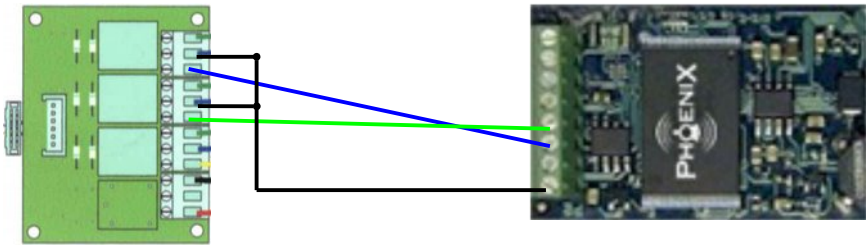

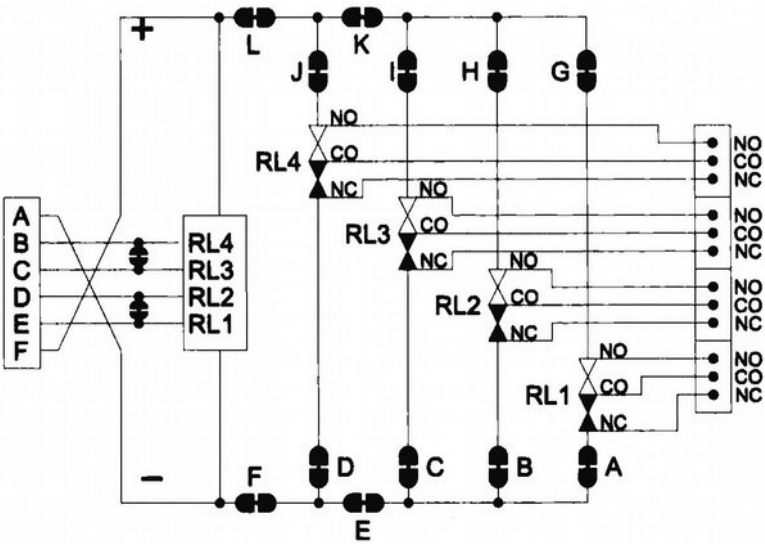

Break Links A,B,E,G,H,K to isolate relay contacts.
Schematic represents foil side view.

Speed Pickup from the Potentiometer, not the motor.

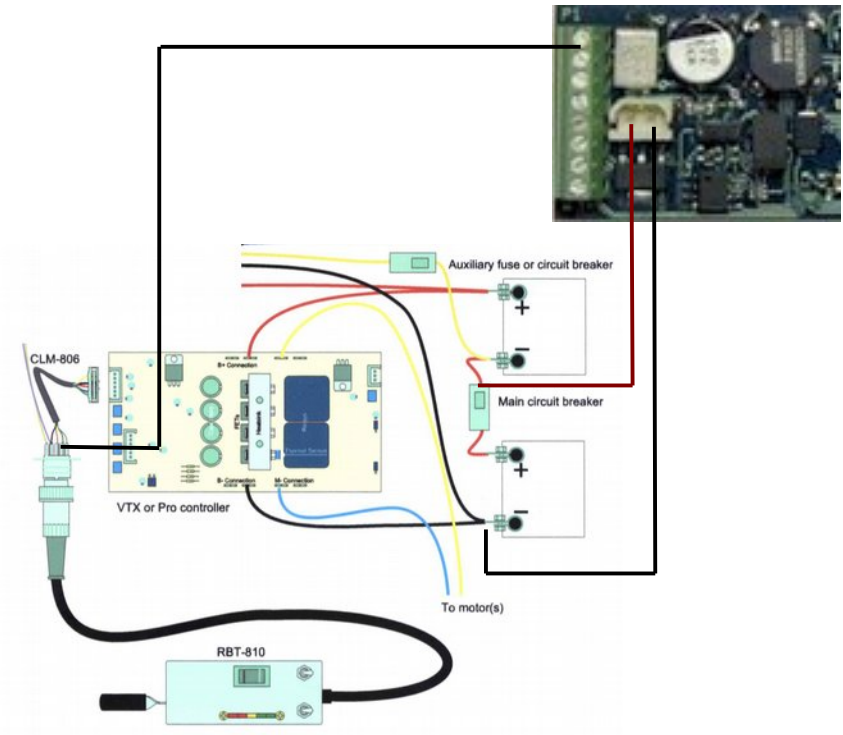

Hand-held Wiring
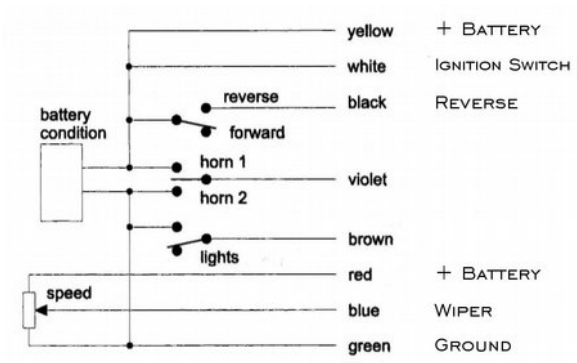
Terminal 1 on the Phoenix sound board connects to the blue wire on 4QD control cable. This is the wiper on the speed control pot and should range from 0 to 24 volts (or perhaps 0 to 12 volts) relative to ground.